LED Linear Lighting

Polaris 52 Direct/Indirect Visual Comfort

SVELTO

LED Linear Lighting

Polaris 52 Direct/Indirect Visual Comfort

SVELTO

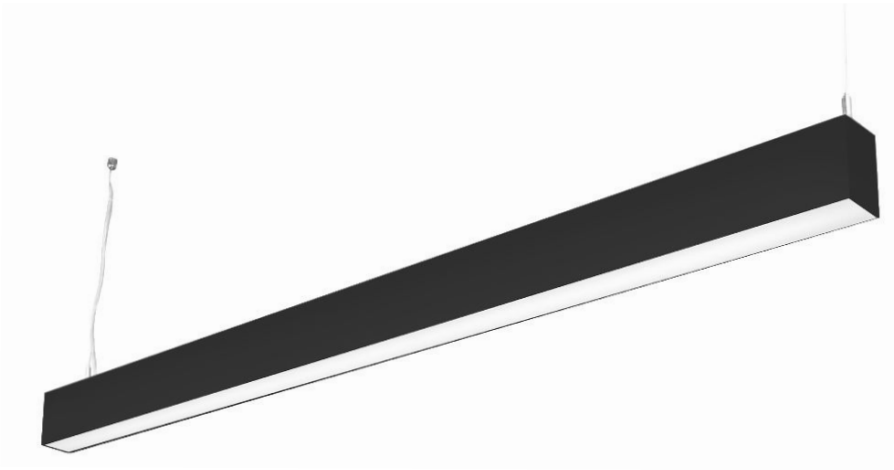

POWER OVER ETHERNET | LOW GLARE | INTEGRAL PIR'S | CONTINUOUS FORMAT | CORNERS/ INTERSECTIONS | 5 YEAR WARRANTY | TRIDONIC OR PHILIPS

The Visual Comfort version meets standard EN 12464 which defines a maximum luminance limit of 3000 candelas per square metre at angles of 65 degrees and above.

SPECIFICATION DATA

Code	Finish	Distribution	Diffuser	Size (mm)	Delivered Lumens (lm)	Total System Wattage (W)	Efficacy (llm/cw)	Colour Temp (°K)	CRI
P52IB/2/VC/F/0568/4K8	Black	Direct & Indirect	Low Glare	568	855	7.10	120.4	4000K	>80
P52IB/2/VC/F/0848/4K8	Black	Direct & Indirect	Low Glare	848	1417	12.00	118.1	4000K	>80
P52IB/2/VC/F/1128/4K8	Black	Direct & Indirect	Low Glare	1128	1979	16.89	117.2	4000K	>80
P52IB/2/VC/F/1408/4K8	Black	Direct & Indirect	Low Glare	1408	2542	21.94	115.9	4000K	>80
P52IB/2/VC/F/1688/4K8	Black	Direct & Indirect	Low Glare	1688	3104	26.19	118.5	4000K	>80
P52IB/2/VC/F/1968/4K8	Black	Direct & Indirect	Low Glare	1968	3666	31.09	117.9	4000K	>80
P52IB/2/VC/F/2248/4K8	Black	Direct & Indirect	Low Glare	2248	4229	35.99	117.5	4000K	>80
P52IB/2/VC/F/2528/4K8	Black	Direct & Indirect	Low Glare	2528	4791	40.64	117.9	4000K	>80
P52IB/2/VC/F/2808/4K8	Black	Direct & Indirect	Low Glare	2808	5353	45.53	117.6	4000K	>80
P52IB/2/VC/F/3088/4K8	Black	Direct & Indirect	Low Glare	3088	5916	50.18	117.9	4000K	>80
P52IB/2/VC/F/3368/4K8	Black	Direct & Indirect	Low Glare	3368	6478	55.08	117.6	4000K	>80
P52IB/2/VC/F/3648/4K8	Black	Direct & Indirect	Low Glare	3648	7040	59.73	117.9	4000K	>80
P52IB/2/VC/F/3928/4K8	Black	Direct & Indirect	Low Glare	3928	7603	64.63	117.6	4000K	>80

- Part numbers are for individual luminaires.
- 5 year warranty
- See website for LDT files
- For CAD/BIM contact us
- For bespoke lengths please contact us
- See website for Technical Data Sheet
- IP20

Please note, maximum run length of standard output fittings is 25m. Any length over this will require an additional mains feed position.

Carbon Footprint Standard Carbon Neutral Organisation

TRIDONIC DALI Scenariio INTELLIGENT INFRASTRUCTURES

LED Linear Lighting

Polaris 52 Direct/Indirect Visual Comfort

SVELTO

Construction

- Extruded aluminium profile
- Clip-in diffuser
- European brand control gear
- Made in the UK

Features

- High efficiency LED boards
- Range of length options
- Wide-beam light distribution

Applications

- Commercial and Business Areas
- Public buildings
- Housing
- Offices
- Hotels and Restaurants
- Arts and Culture spaces

Benefits

- Custom-fit options
- Contemporary style
- Energy efficient solution
- 5 Year warranty

Optical Options

Code	Description
/HXP	Low Glare
/OS	Opal

Mounting Options

Code	Description
P52/SUS/1.25M	Suspended 1.25M
P52/SUS/3.0M	Suspended 3M
P52/SUS/5.0M	Suspended 5M
/NA	Surface Mounted (Standard)

For suspended specify the codes as required.

CCT Options

Code	Description
4K8	4000K (Standard)
3K8	3000K

For 3000K version, replace '4K8' in part number with '3K8'

Finish Options

Code	Description
N/A	N/A recessed fitting

Control Options

Code	Description
D	DALI
S	Switchdim control

For DALI control, replace 'F' in part number with 'D' for SwitchDim replace 'F' with 'S'

Emergency Options

Code	Description
/EM	3 hour maintained, manual test
/ED	3 hour maintained, DALI / Self Test

For emergency version, add onto end of part number as required

Dimensions

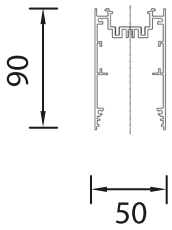

Continuous Options

Code	Description
C	Continuous
S	Start of run
E	End of run

Part numbers are for individual luminaires. For continuous replace 'I' in part number with 'C', 'S' or 'E'. Please sepcify continuous seperately.
ie **P3IB/HX/F/3990/4K8**

Please note, The light source contained in this luminaire shall only be replaced by the manufacturer or his service agent or a similar qualified person.

TECH DATA SHEET

EMAIL SALES

LED Linear Lighting

Polaris 52 Direct/Indirect Comfort

SVELTO

STANDARD FINISHES

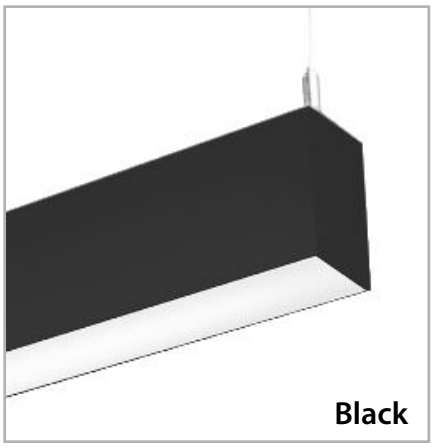

Black finish as standard - respresented by 'B' in the part number

For White finish, replace 'B' in part number with 'W'

For Silver finish, replace 'B' in part number with 'S'

ANY RAL BY REQUEST

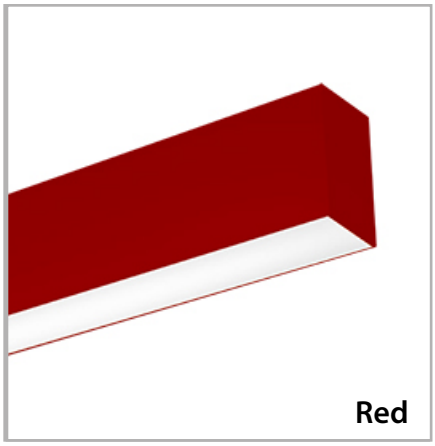

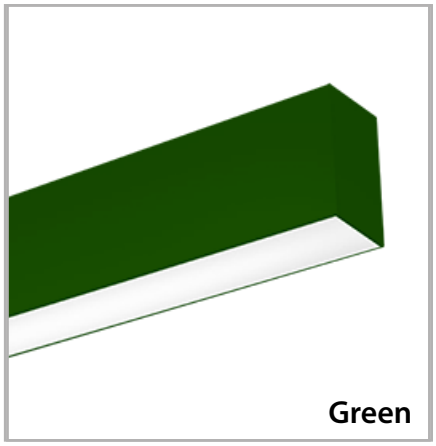

Contact us for custom RAL finishes prices and specification. Synergy Creativ can powder coat fittings to any RAL colour you require by request.

SPECIAL FX FINISHES

Contact us for all SFX finish prices and specification. Synergy Creativ's Special FX tetxured finished included Marble, Concrete, Wood Grains, Metallic and many more. all images are for illustrative purposes only actual product may vary, please contact us for samples.

TECH DATA SHEET

EMAIL SALES

Polaris 52 Direct/Indirect Visual Comfort

SVELTO

Accessories

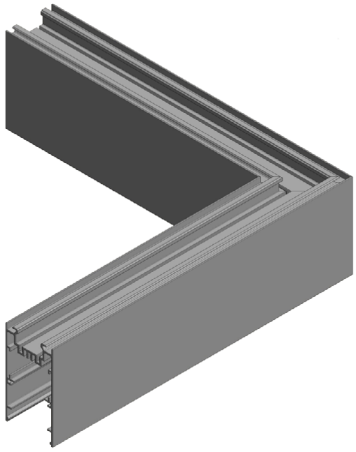

Corner connector

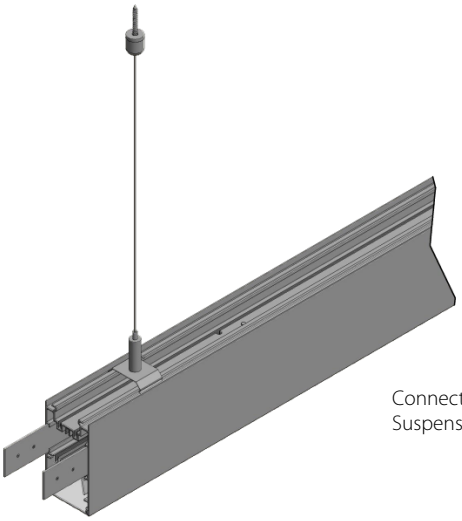

Connector plates and Suspension

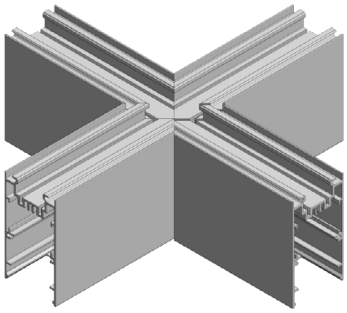

X connector

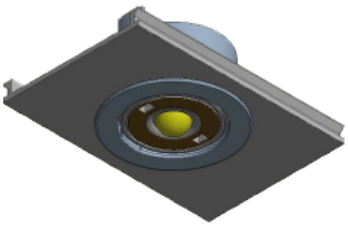

PIR Plate

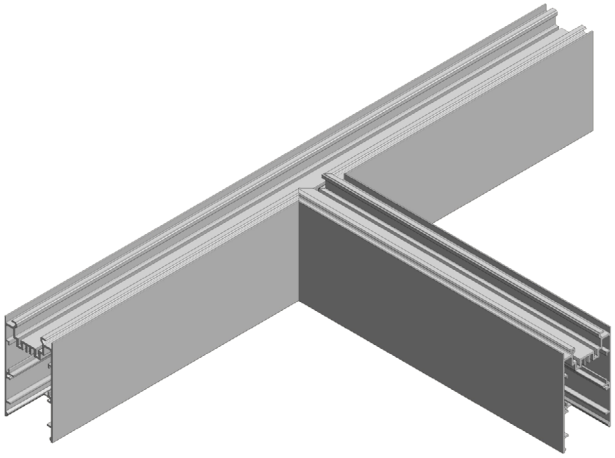

T connector

TECH DATA SHEET

EMAIL SALES

SYNERGY CREATIV.

HEAD OFFICE: Unit 4, Charlton Mead Lane, Hoddesdon, Hertfordshire EN11 0DJ
SHOWROOM: 121-131 Rosebery Ave, London EC1R 4RF
SHOWROOM: 1 New York St, Manchester M1 4HD

01992 445828 **quotes@synergycreativ.com**

ENABLED

EnabLED
Licensing Program for LED Luminaires and Retrofit Bulbs
Member
Synergy Commercial Lighting Limited